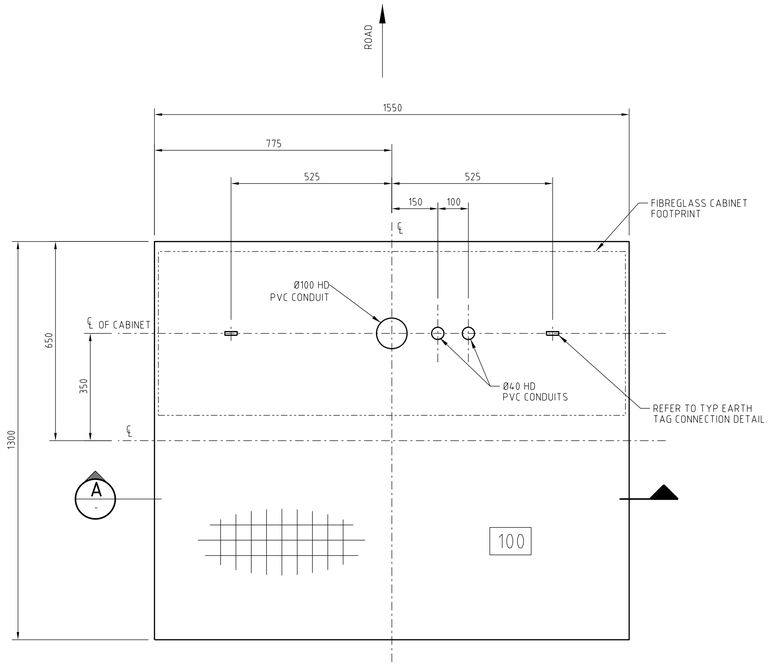

PLAN VIEW

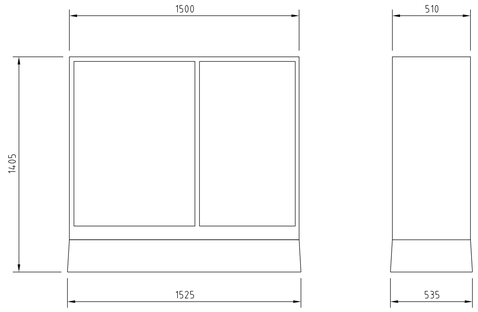

FIBREGLASS CABINET DETAIL

SCALE 1:20
REFER TO MANUF. DRAWING FOR FULL DETAIL
(MAX WEIGHT 100kg)

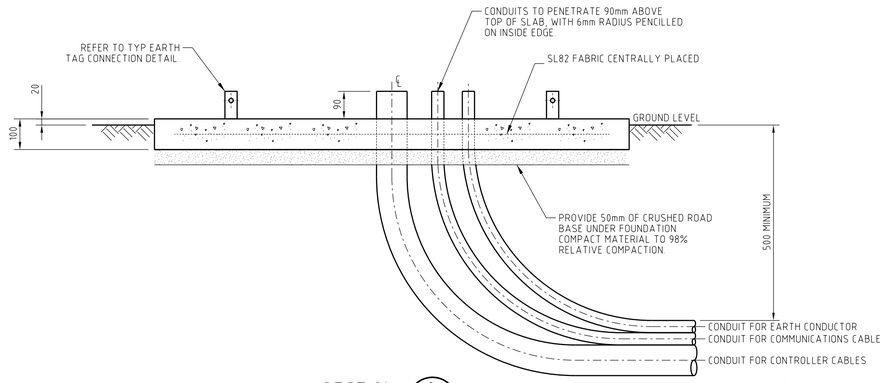

SECTION A
SCALE 1 : 10

DIRECTION OF CONDUIT BENDS TO BE TOWARD REGULATOR POLE. REFER TO SITE SPECIFIC PLAN.

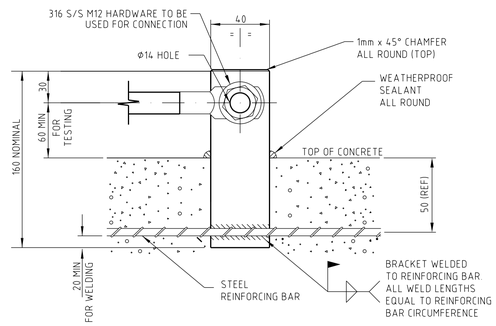

TYPICAL EARTH TAG CONNECTION DETAIL

NOT TO SCALE
MATERIAL: 40 x 12 FL MILD STEEL, HOT DIP GALV.

GENERAL NOTES

G1. STABILITY OF THE BUILDINGS, TRANSFORMERS & OTHER EQUIPMENT & FOUNDATIONS DURING CONSTRUCTION & THE CONSEQUENCES OF EXCAVATION IN THE VICINITY OF ADJACENT STRUCTURES ARE THE BUILDER'S RESPONSIBILITY.
G2. ALL PROPRIETARY ITEMS ARE TO BE INSTALLED IN ACCORDANCE WITH MANUFACTURER'S INSTRUCTIONS.
G3. ALL WORKMANSHIP AND MATERIALS ARE TO BE IN ACCORDANCE WITH THE CURRENT STANDARDS AUSTRALIA CODES AND BUILDING CODE OF AUSTRALIA.
G4. DO NOT SCALE DRAWING. ALL DIMENSIONS ARE IN MILLIMETRES.
G5. ALL LEVELS ARE IN METRES ON AUSTRALIAN HEIGHT DATUM UNLESS NOTED OTHERWISE.
G6. ELECTRICAL SAFETY SHALL BE IN ACCORDANCE WITH AUSGRID'S ELECTRICAL SAFETY RULES, NS 165 AND AS REQUIRED BY AUSGRID'S MANAGEMENT.
G7. MAINTAIN EARTHING GRID AT ALL TIMES. MAKING & BREAKING OF EARTHING CONNECTIONS WILL BE BY AUSGRID.
G8. HANDLE & DISPOSE OF ALL CONTAMINATED MATERIAL IN ACCORDANCE WITH RELEVANT O.H.&S. ACTS & REGULATIONS AND E.P.A. REQUIREMENTS.

CONCRETE NOTES

C1. ALL CONCRETE MUST BE IN ACCORDANCE WITH THE CURRENT AS CODE 3600. ALL CONCRETE TO BE MANUFACTURED AND SUPPLIED IN QUALITY CONTROLLED CERTIFIED PLANT, IN ACCORDANCE WITH AS 1379. NO SITE MIXING PERMITTED. CONCRETE TESTS AS REQUIRED BY AS 1379 - CERTIFICATES TO BE PROVIDED AS FOLLOWS:

ITEM	REQUIREMENT
- SLUMP	- AS PER CODE
- 7 DAY STENGTH	- IF REQUIRED
- 28 DAY CHARACTERISTIC STRENGTH	- FIRST TRUCK, 3rd TRUCK AND EVERY 5th TRUCK FOLLOWING BUT NOT LESS THAN CODE
- FLEXURAL STRENGTH	- FOR PAVING SLABS WHERE FLEXURAL STRENGTH IS SPECIFIED
- CHLORINE & SULPHATE CONTENT	- AS PER CODE
- DRYING SHRINKAGE	- AS PER CODE
- AIR CONTENT	- NOT REQUIRED

C2. CONCRETE QUALITY
WATER/CEMENT RATIO SHALL NOT BE GREATER THAN 0.55. NO WATER TO BE ADDED ON SITE.

ELEMENT	MAX. AGG SIZE	SLUMP	CHARACTERISTIC STRENGTH F'c (AS 3600) AT 28 DAYS	MAXIMUM SHRINKAGE STRAIN $\mu\varepsilon$
FOOTINGS	20 mm	80 mm	32 MPa	650

C3. CLEAR CONCRETE COVER IN mm TO REINFORCEMENT UNLESS NOTED OTHERWISE.

ELEMENT	FORMED & SHELTERED	FORMED & EXPOSED	AGAINST EARTH
FOOTINGS	40 mm	45 mm	65 mm

C4. NO ADMIXTURES ARE TO BE ADDED TO CONCRETE WITHOUT THE PRIOR WRITTEN APPROVAL OF THE AUSGRID STRUCTURAL ENGINEER.
C5. CONCRETE SHALL NOT BE POURED ON HOT WINDY DAYS WITH EVAPORATION RATES GREATER THAN 1.5 l/m/hr. WHERE THE EVAPORATION RATE IS ABOVE 0.6 l/m/hr ALIPHATIC ALCOHOL (E.G. CONFILM) SHALL BE USED IN ACCORDANCE WITH THE MANUFACTURER'S DIRECTIONS TO PREVENT PLASTIC SHRINKAGE CRACKING.
C6. ALL CONCRETE SHALL BE CURED IMMEDIATELY AFTER FINISHING CONCRETE TO ENSURE THE PREVENTION OF CRACKING AND TO SATISFY THE REQUIREMENTS OF STRENGTH, SERVICEABILITY AND DURABILITY. ALL CONCRETE SURFACES TO BE KEPT CONTINUOUSLY WET FOR 7 DAYS AND THEN ALLOWED TO GRADUALLY DRY OUT. THE USE OF SPRAYED MEMBRANE-FORMING CURING COMPOUNDS COMPLYING WITH AS 3799 SHALL BE PERMITTED, SUBJECT TO PRIOR APPROVAL BY THE AUSGRID STRUCTURAL ENGINEER.
C7. SPLICES IN REINFORCEMENT SHALL BE MADE ONLY IN THE POSITIONS SHOWN & SHALL BE SUFFICIENT TO DEVELOP THE FULL STRENGTH OF THE REINFORCEMENT. FABRIC REINFORCEMENT MINIMUM SIDE & END LAPS SHALL BE 400mm.
C8. ALL REINFORCEMENT TO BE ACCURATELY PLACED IN POSITION SHOWN & TIED & ADEQUATELY SUPPORTED TO GIVE SPECIFIED COVER.
C9. CONCRETE SIZES SHOWN DO NOT INCLUDE THICKNESS OF APPLIED FINISHES.
C10. DEPTH OF BEAM IS GIVEN FIRST & INCLUDES SLAB THICKNESS.
C11. CONDUITS PIPES ETC. MUST NOT BE PLACED IN CONCRETE COVER & NO HOLES OR CHASES OTHER THAN THOSE SHOWN ON THE STRUCTURAL DRAWINGS SHALL BE ALLOWED UNLESS APPROVED IN WRITING BY THE AUSGRID STRUCTURAL ENGINEER.
C12. ALL TIE RODS WHERE NOT SHOWN ON THE DRAWING SHALL BE N12-200.
C13. CONCRETE ELEMENTS SHALL BE FINISHED IN ACCORDANCE WITH AS 3610 AS FOLLOWS:

ITEM	FINISH
SLAB	BROOM FINISH

REINFORCEMENT SYMBOLS			
C14.	RL		DENOTES RECTANGULAR LOW DUCTILITY REINFORCING FABRIC TO AS/NZS 4671
	SL		DENOTES SQUARE LOW DUCTILITY REINFORCING FABRIC TO AS/NZS 4671
	R		DENOTES STRUCTURAL GRADE ROUND BAR TO AS/NZS 4671
	N		DENOTES 500 GRADE DEFORMED BAR NORMAL DUCTILITY TO AS/NZS 4671
	C		DENOTES COLD WORKED DEFORMED BAR TO AS/NZS 4671
	THE NUMBER FOLLOWING THE SYMBOLS R, N AND C IS THE BAR DIAMETER IN MILLIMETRES.		

CAD DRAWING
DO NOT MANUALLY AMEND

AMENDMENTS

1	DWN: SPENCER PASCOE CHKED: STEPHEN LILLISS DATE: 11/11/2008 GENERAL UPDATE	APP'D by STEPHEN LILLISS
2	DWN: SPENCER PASCOE CHKED: DANIEL DAFO DATE: 02/07/2010 Ø40 CONDUITS ADDED	APP'D by ROSS HUGHES
3	DWN: DANIEL DAFO CHKED: PETER JARVIS DATE: 05/05/2011 CONDUITS LABELLED LABELS REMOVED FROM DRAWING FOR NEW STANDARD (ROUGH) POSITIONING OF MOUNTED VOLTAGE REGULATOR	APP'D by ROSS HUGHES
4	DRAWN C MABBUTT 03.11.11 CHECKED P JARVIS APPROVED P JARVIS P/N PM02-02010-1-3-1 CONVERTED TO AUTOCAD NEW DRAWING BORDER ADDED NEW REFERENCE DRAWINGS ADDED	DWN: P.R. CHKD: P.J. APP'D: G.F.
5	DATE: 07/04/2026 LABELS ADDED TO DRAWINGS AMENDED.	

ASSOCIATED DRAWINGS	
11kV POLE MOUNTED VOLTAGE REGULATOR CONTROLLING NOJA TYPE OSM15 RECLOSER	273250
11kV POLE MOUNTED 3 UNIT VOLTAGE REGULATOR WITH GROUND MOUNT CONTROL PANELS	224229
11kV POLE MOUNTED VOLTAGE REGULATOR WITH CONTROLLING NOJA TYPE OSM15 RECLOSER	273251
11kV POLE MOUNTED 2 UNIT VOLTAGE REGULATOR WITH GROUND MOUNT CONTROL PANELS	224401

NETWORK STANDARD
Ausgrid
42 HONEYSUCKLE DRIVE,
NEWCASTLE WEST NSW 2300

SCALE	1:10
DESIGNED	PETER STOREY
DRAWN	SPENCER PASCOE
CHECKED	PETER STOREY
APPROVED	ROSS HUGHES
DATE	10/11/2008
PROJECT NUMBER	STD
TRIM REF NUMBER	-

STANDARD CONSTRUCTION
11kV POLE MOUNTED VOLTAGE REGULATOR
GROUND MOUNTED FIBREGLASS CABINET
CONCRETE FOOTING DETAILS

SIZE	DRAWING No	SHEET	REV
A1	191227	1	5

©