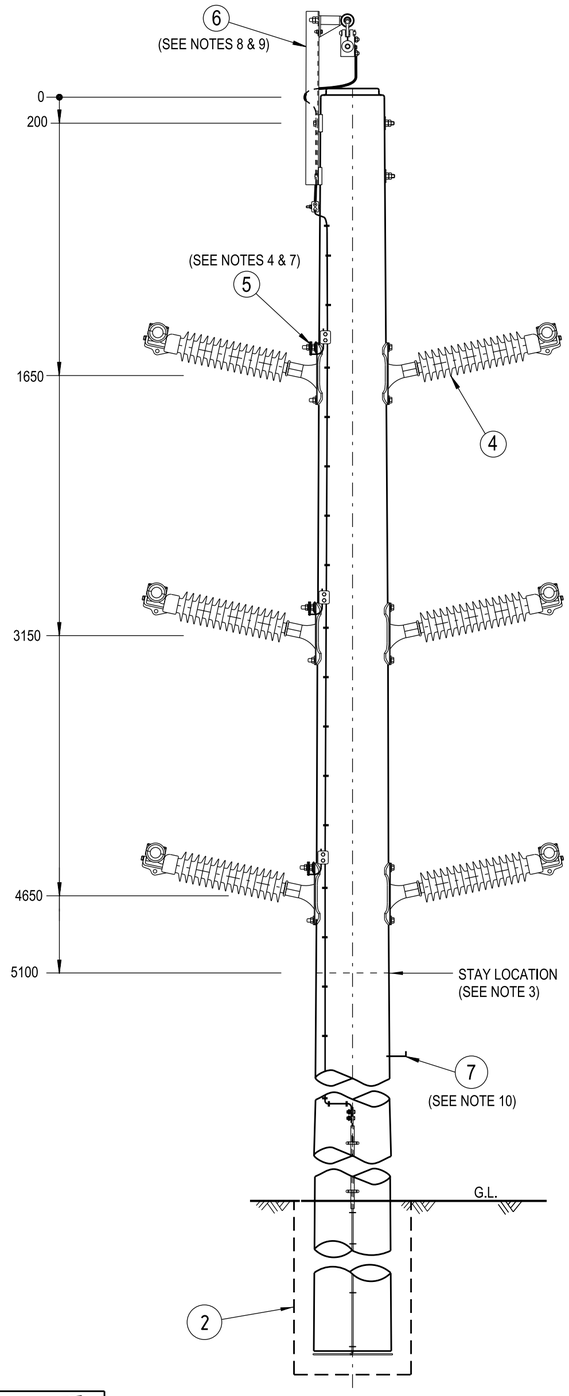

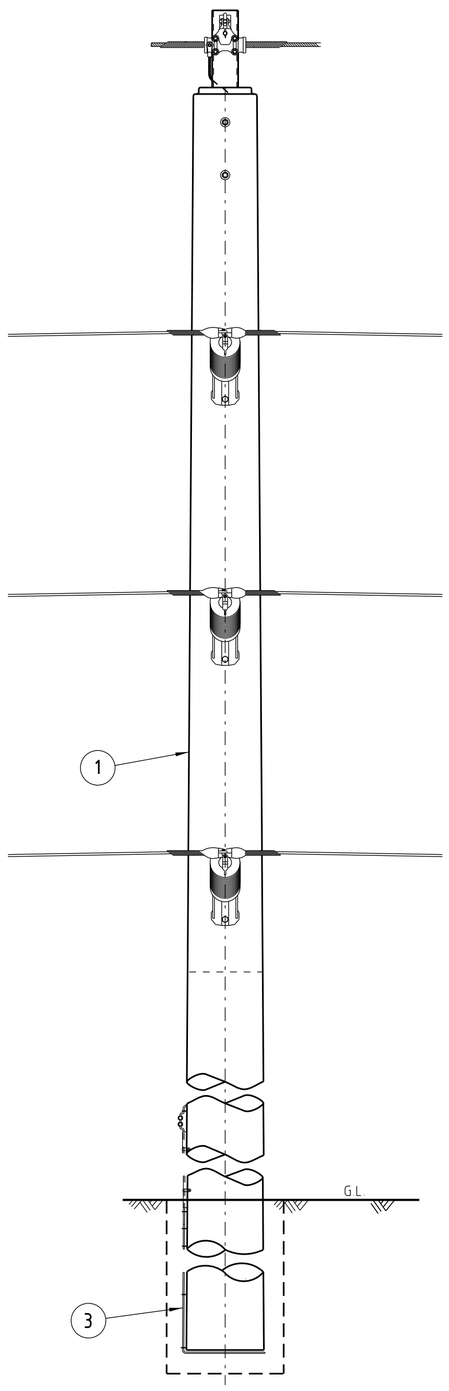

NOTES :

1. THE FOLLOWING INFORMATION IS OBTAINED FROM THE PROJECT DESIGN DRAWINGS :
   a. POLE LENGTH AND STRENGTH.
   b. SPECIAL FOUNDATION REQUIREMENTS.
   c. POLE EMBEDMENT DEPTH.
   d. PHASE CONDUCTOR AND OVERHEAD EARTHWIRE SIZE.
   e. STAY REQUIREMENTS.
   f. DEVIATION ANGLE.
   g. ASSESSED EARTHING REQUIREMENTS.
2. THE MAXIMUM LINE DEVIATION ANGLE TO BE CONSTRUCTED ON THIS ARRANGEMENT IS TO BE DETERMINED BY THE LINE DESIGNER.
3. STAYS TO BE INSTALLED SO THAT THE STAY WIRE CLEARANCE FROM THE PHASE CONDUCTORS COMPLIES WITH THE STATUTORY REQUIREMENTS.
4. THE OVERHEAD EARTH WIRE DOWN LEAD IS TO BE FIXED TO THE POLE SO AS TO GIVE THE MAXIMUM CLEARANCE TO THE NEAREST PHASE CONDUCTOR.
5. ALL BOLTS PASSING THROUGH TIMBER ARE TO BE COATED WITH GRAPHITE GREASE.
6. POLES SHALL BE DRILLED, SCARFED AND DRESSED ON SITE. DRILLING AND SCARFING TO BE TREATED WITH APPROVED PRESERVATIVES.
7. THE EARTHING DOWN LEAD IS TO BE FIXED TO THE POLE WITH STAPLES AT INTERVALS NOT GREATER THAN 450mm. ONLY SUFFICIENT INSULATION IS TO BE REMOVED FROM THE DOWN LEAD TO MAKE AN EFFECTIVE CONNECTION TO THE POLE HARDWARE.
8. ONLY THE OPGW OVERHEAD EARTHWIRE OPTION IS SHOWN ON THIS CONSTRUCTION DRAWING.
9. USE THE OPGW CHANNEL BRACKET SUSPENSION ARRANGEMENT WHEN ERECTING AN OPGW OVERHEAD EARTHWIRE. USE THE STANDARD EARTHWIRE CHANNEL BRACKET SUSPENSION ARRANGEMENT WHEN ERECTING A NON OPGW OVERHEAD EARTHWIRE.
10. POLE STEPS SHOULD ONLY BE INSTALLED ON POLES WHERE ACCESS FOR NORMAL MAINTENANCE VEHICLES CANNOT BE MAINTAINED FOR THE LIFE OF THE POLE. IF POLE STEPS ARE INSTALLED, THEY ARE TO COMPLY WITH THE REQUIREMENTS OF NETWORK STANDARD NS128.
11. REFER TO DESIGNER SAFETY REPORT D20/321067 FOR ATYPICAL HAZARDS ASSOCIATED WITH THIS STANDARD CONSTRUCTION.

ITEM	DESCRIPTION	DRG. No	QTY
7	STEP - POLE, SCREW-IN (SEE NOTE 10)	250144	A/R
6	EARTHWIRE - SUSPENSION, OVERHEAD, CHANNEL BRACKET, MOUNTING, ARRANGEMENT -1 (SEE NOTES 8 & 9)	513974	1
	OPGW - SUSPENSION, CONDUCTOR, CHANNEL BRACKET, MOUNTING, ARRANGEMENT -1b (SEE NOTES 8 & 9)	244708	
5	EARTHWIRE - OVERHEAD, DOWNLEAD, POLE HARDWARE, MOUNTING & BONDING, ARRANGEMENT -4 (SEE NOTES 4 & 7)	514145	3
4	INSULATOR - HORIZONTAL LINE POST, 66kV, MOUNTING & BONDING, ARRANGEMENT -5a	514161	3
3	EARTHING - ARRANGEMENT, TIMBER POLE STRUCTURE, TYPE SE-M5	508786	1
2	FOOTING - TIMBER POLE, ARRANGEMENT (SEE NOTE 1)	508726	1
1	POLE - TIMBER (AS REQUIRED)	513988	1

ALL DIMENSIONS IN MILLIMETRES UNLESS NOTED OTHERWISE. DO NOT SCALE.

CAD DRAWING
DO NOT MANUALLY AMEND

AMENDMENTS			
1	DWN: PATRICIA RIOS CHKED: PHILLIP JONES DATE: 17/08/2020	INSULATORS & EARTHING UPDATED. NOTES & MATERIAL LIST AMENDED.	APP'D by: GLENN FORD

ASSOCIATED DRAWINGS

NETWORK STANDARD
Ausgrid
145 NEWCASTLE RD WALLSEND, NSW 2287

SCALE	1:25
DESIGNED	PAUL HOCKINGS
DRAWN	GARY HUGHES
CHECKED	PHIL JONES
APPROVED	STEPHEN CONNOR
DATE	23/08/07
PROJECT NUMBER	STD
PROJTRAK NUMBER	-

STANDARD CONSTRUCTION
66kV DUAL VERTICAL
HORIZONTAL LINE POST CONSTRUCTION
WITH OVERHEAD EARTHWIRE ON RAISER BRACKET
5-180E

SIZE	DRAWING No	SHEET	AMD
A2	184115	01	1

20110901

©