ALTERNATE SITE PLANS

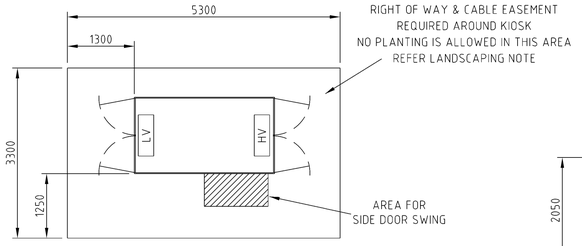

SITE PLAN A
Scale 1:50

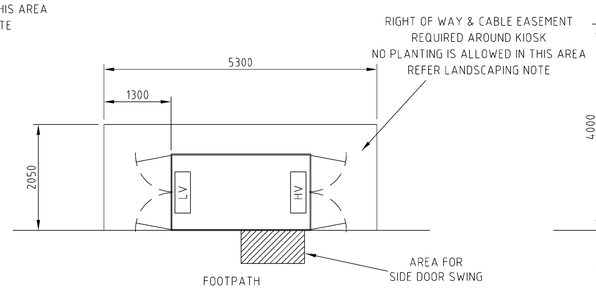

SITE PLAN B
USED IN URD AREAS ONLY
Scale 1:50

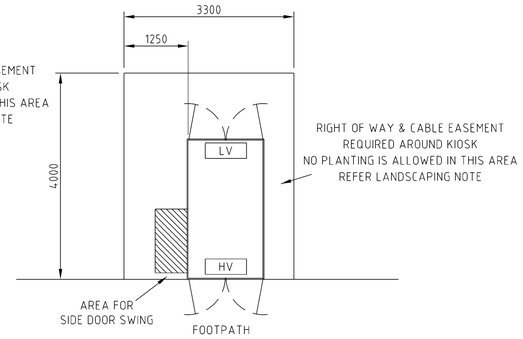

SITE PLAN C
USED IN URD AREAS ONLY
Scale 1:50

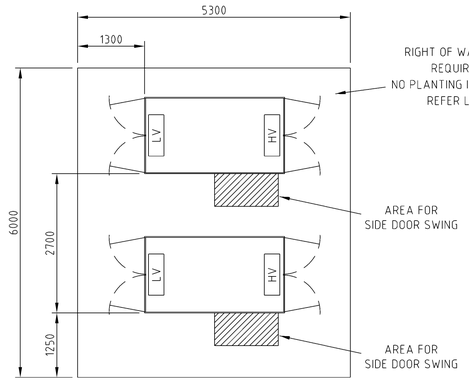

SITE PLAN D
Scale 1:50

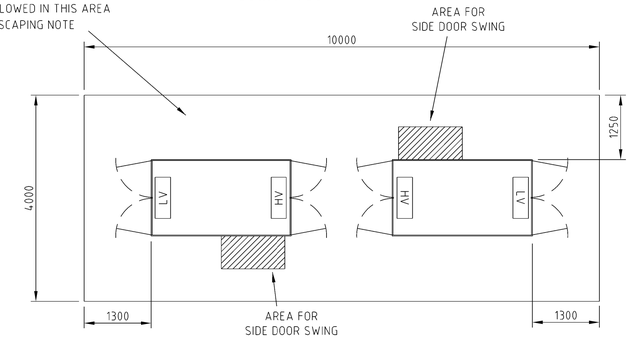

SITE PLAN E
Scale 1:50

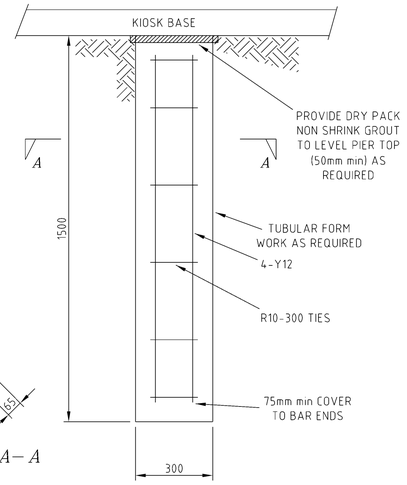

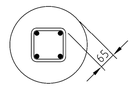

SECTION A–A

TYPICAL REINFORCED PIER
Scale 1:10

THE PIER SHOWN ABOVE IS TYPICAL ONLY
AND MAY NOT BE SUITABLE FOR
THE KIOSK INSTALLATION BEING PROPOSED
REFER TO PIERS NOTE FOR FURTHER INFORMATION

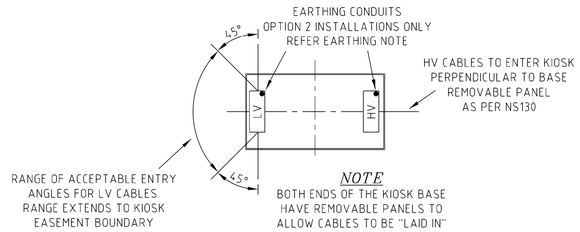

NOTE
BOTH ENDS OF THE KIOSK BASE
HAVE REMOVABLE PANELS TO
ALLOW CABLES TO BE "LAID IN"

CABLE ENTRY TO KIOSK BASE
Scale 1:50

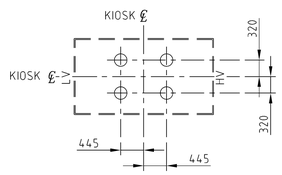

PIER LAYOUT
Scale 1:50

NOTES

SITE
ALL DIMENSIONS SHOWN ARE MINIMUM REQUIREMENTS.
THE SITE MUST BE LEVEL AND CLEAR OF ALL CONSTRUCTION AND ACCESSIBLE FOR EQUIPMENT INSTALLATION AND MAINTENANCE. NO SERVICES SUCH AS DRAINS, HIGH OR LOW PRESSURE PIPES, ELECTRICAL OR COMMUNICATION CABLES, WATER PIPES etc ARE TO BE LOCATED WITHIN THE AREA SHOWN ON THE SITE PLAN.
ANY FILL USED WITHIN THE AREA SHOWN ON THE SITE PLAN IS TO BE CLEAN COMPACTED SAND.

ACCESS
PROVISION MUST BE MADE FOR ALL WEATHER ACCESS TO THE KIOSK SITE BY HEAVY MOBILE CRANE AND TRUCK.
WHERE STEPS ARE REQUIRED FOR PERSONNEL ACCESS, THEY MUST BE PROVIDED EXTERNAL TO THE KIOSK SITE.

PIERS
PIERS ARE TO BE CONSTRUCTED IN THE LOCATIONS SHOWN FOR ALL KIOSK SITES.
THE PIERS SHOWN ON THIS DRAWING WILL BE SUITABLE FOR USE AT MOST SITES, HOWEVER AT SOME SITES WHERE THE GROUND IS FOUND TO BE FILLED OR UNSTABLE, PIERS ARE TO BE DESIGNED BY A QUALIFIED AND PRACTISING STRUCTURAL ENGINEER TO CARRY A TOTAL LOAD OF 7350kg.
VERIFICATION IS ALSO REQUIRED THAT THE BEARING OF ANY PIER USED ON THE KIOSK SITE AT ITS FOUNDATION DEPTH HAS A CAPACITY OF 300kPa.
DRAWINGS OF THE KIOSK SITE AND PIERS ARE TO BE SUBMITTED BEFORE CONSTRUCTION COMMENCES.

EARTHING
EARTHING IS TO BE INSTALLED AFTER THE SITE IS CLEARED AND PIER CONSTRUCTION COMPLETED.
TYPICAL EARTHING DETAILS FOR KIOSK SUBSTATIONS ARE SHOWN ON DRAWINGS 167433, 167434 AND 173990. HOWEVER INFORMATION SHOWN ON THESE DRAWINGS IS INDICATIVE ONLY AS EACH KIOSK SITE REQUIRES A SPECIFIC EARTHING DESIGN TO BE UNDERTAKEN AS INDICATED IN NETWORK STANDARD NS116.
EARTHING FOR SITES USING OPTIONS 2a AND 2b IS TO BE UNDERTAKEN USING THE METHODS SHOWN ON DRAWING 25121 FOR EARTHING CONDUITS AND EARTH ROD INSTALLATION UNDER ANY CONCRETE FLOOR.

CABLE AND CONDUIT INSTALLATION
CABLES AND CONDUITS ARE TO BE INSTALLED TO NETWORK STANDARD NS130.
WHERE THE COVER CANNOT BE ACHIEVED OR THE CABLES PASS UNDER AN AREA WHICH CANNOT BE READILY EXCAVATED IN THE FUTURE, A BANK OF Ø125mm ORANGE LD RIGID UPVC PIPE CONFORMING TO AS 2053 PART 2, MAY BE REQUIRED TO BE INSTALLED TO A 1500mm² EXCAVABLE AREA SUITABLE FOR LOCATING CABLE JOINTS. THIS AREA IS TO BE IN A POSITION AGREED BY THE BOTH THE BUILDER AND AUSGRID.
WHERE CONDUITS SUPPLYING THE KIOSK SUBSTATION PASS UNDER A ROADWAY OR A BUILDING THEY ARE TO BE CONCRETE ENCASED.

PROTECTION OF KIOSK FROM VEHICLE DAMAGE
IT IS THE CUSTOMER'S RESPONSIBILITY TO PROVIDE ADEQUATE PERMANENT PROTECTION IF KIOSKS ARE LOCATED IN THE VICINITY OF AREAS USED BY VEHICLES.
ANY FORM OF PROTECTION USED SHOULD MEET THE REQUIREMENTS STATED IN AS/NZ 1170.1 AND CAN TAKE THE FORM OF BOLLARDS OR CRASH BARRIERS.
VEHICLE PROTECTION SHOULD BE PLACED ON THE OUTSIDE OF THE KIOSK SITE.

REINSTATEMENT OF VEHICULAR ROADWAY OR CABLE EASEMENT
THE CUSTOMER IS RESPONSIBLE FOR ALL REINSTATEMENT.

LANDSCAPING THE SITE
AFTER THE EQUIPPING CONTRACTOR HAS INSTALLED THE KIOSK AND THE CUSTOMER'S CABLES HAVE BEEN INSTALLED, THE BUILDER MAY COVER THE KIOSK SITE WITH EITHER MEDIUM TO LARGE PINE BARK CHIPS, BLUE METAL, LAWN, WOODCHIPS, REMOVABLE PAVERS OR DECORATIVE GRAVEL, TO A DEPTH OF 120mm.
PLASTIC SHEETING IS NOT TO BE USED UNDER THE COVER AND NO PLANTING IS ALLOWED IN AREA SHOWN ON THE SITE PLAN.

REFERENCES

AUSGRID'S NETWORK STANDARDS	NS 0141 NS 0117 NS 0130 NS 0116
SINGLE KIOSK SUBSTATIONS TYPICAL COMBINED EARTHING DETAILS	167433
DOUBLE KIOSK SUBSTATIONS TYPICAL COMBINED EARTHING DETAILS	167434
SINGLE KIOSK SUBSTATIONS TYPICAL SEGREGATED EARTHING DETAILS	173990

ALTERNATE INSTALLATION METHODS

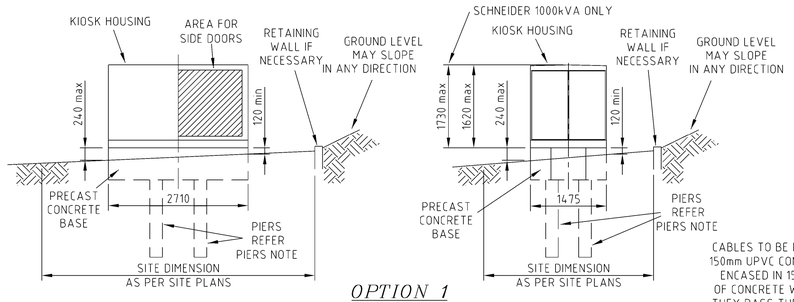

OPTION 1
INSTALLATION DIRECT ON GROUND
Scale 1:50

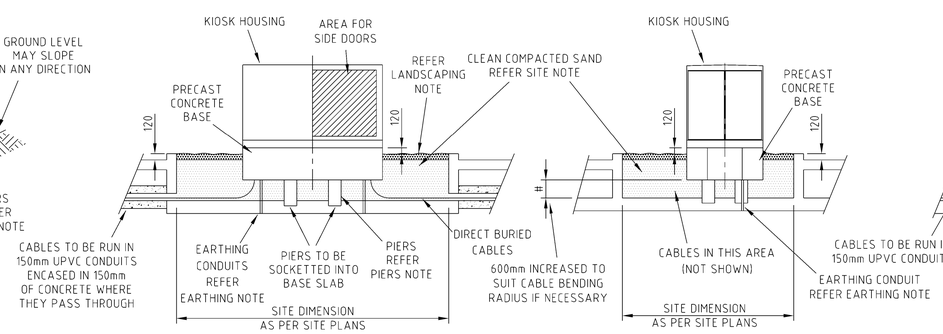

OPTION 2a

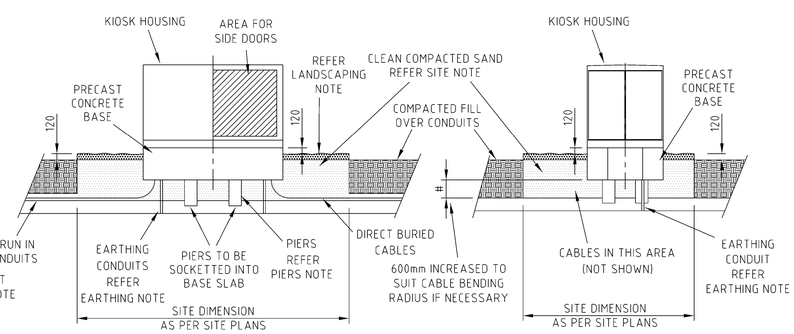

OPTION 2b

INSTALLATION OVER A SUPPORTING STRUCTURE
Scale 1:50

20	NEW DRAWING MADE	
19	SITE PLANS B&C DESIGNATED FOR URD AREAS KIOSK HOUSING UPDATED TO NEW DIMENSIONS STD 11 & 5. KIOSK IN OPTIONS 2a&2b RAISED 120mm ABOVE LANDSCAPING NOTES UPDATED TITLE MODIFIED PN PM -2-2013-0-2012 P JARVIS 21.6.13 CHECKED P TURRIN APPROVED P TURRIN	
18	SITE PLANS D & E FOR DOUBLE KIOSKS ADDED. REFERENCE TABLE UPDATED EARTHING & VEHICLE PROTECTION NOTES UPDATED PN PM -2-2013-0-2012 P JARVIS 24.4.14 CHECKED P TURRIN APPROVED P TURRIN	
17	HV AND LV CABLES CHANGED TO ALIGN WITH NS130. PIERS SHOWN ON OPTION 1. PN OPEX 6568-1-1-6 P JARVIS 4.1.17 CHECKED D THIRUNAVAKARASU APPROVED P TURRIN	
16	OPTION 1 – SCHNEIDER MAX HEIGHT 1730 ADDED PROS 17012022 CHECKED - P MABBUTT APPROVED P TURRIN	
	DATE: 14/03/2024 CABLE DIMENSIONS NOTE AMENDED FOR OPTIONS 2a & 2b	

CAD DRAWING
DO NOT MODIFY MANUALLY

DWN P.R
CHKD: N.R
APP'D: G.F

CONSTRUCTION

NETWORK STANDARD
Ausgrid
NETWORK RISK AND PLANNING
PRIMARY SYSTEMS
TRANSMISSION & DISTRIBUTION SUBSTATION ENGINEERING
570 GEORGE STREET, SYDNEY

SCALE	AS SHOWN
DESIGNED	-
DRAWN	P JARVIS
CHECKED	PW
APPROVED	MR
DATE	2001
PROJECT NUMBER	STD
PROJTRAK NUMBER	

SIGNED ORIGINAL

TYPE L KIOSK
LAYOUT OPTION PLAN

SIZE	DRAWING No	SHEET	AMD
B1	151572	1	17

20110714

151572-1.dwg 14/03/2024 10:11:08 AM