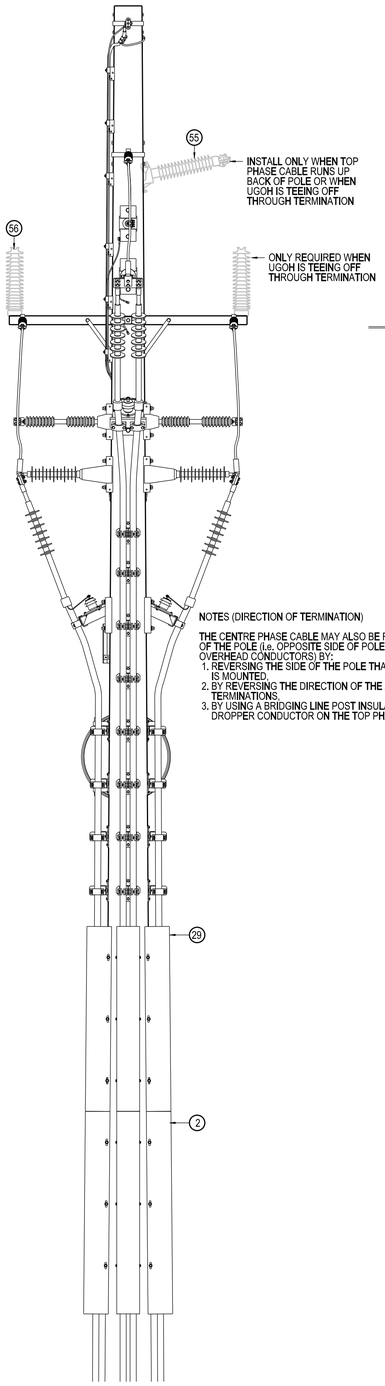

FRONT VIEW

NOTES (DIRECTION OF TERMINATION)

THE CENTRE PHASE CABLE MAY ALSO BE RUN UP THE BACK OF THE POLE (i.e. OPPOSITE SIDE OF POLE TO INCOMING OVERHEAD CONDUCTORS) BY:

1. REVERSING THE SIDE OF THE POLE THAT THE CROSSARM IS MOUNTED.
2. BY REVERSING THE DIRECTION OF THE AERIAL CONDUCTOR TERMINATIONS.
3. BY USING A BRIDGING LINE POST INSULATOR FOR THE DROPPER CONDUCTOR ON THE TOP PHASE.

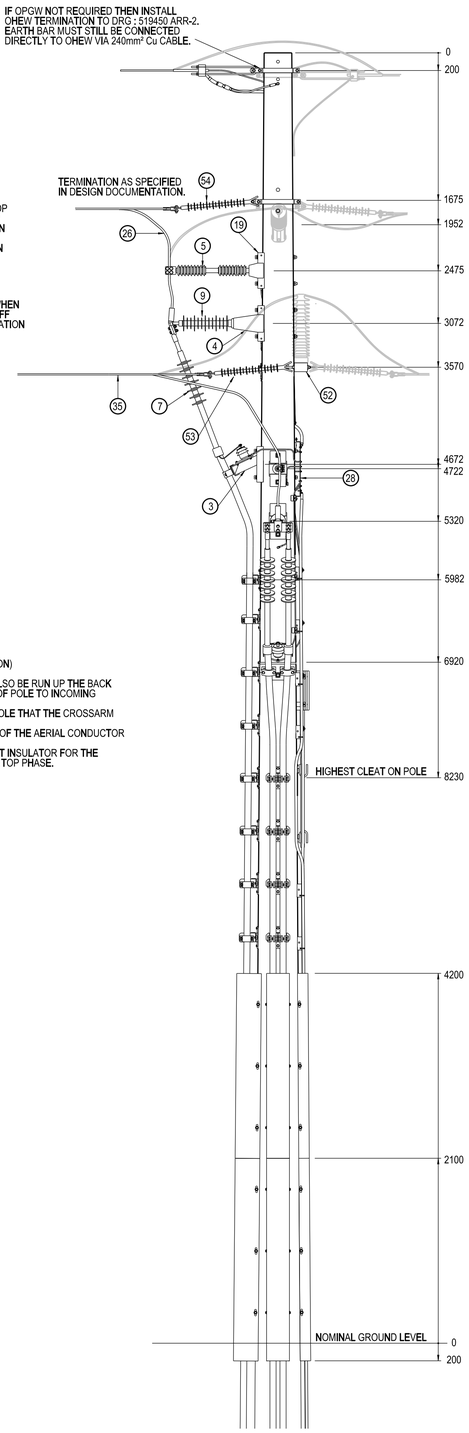

SIDE VIEW

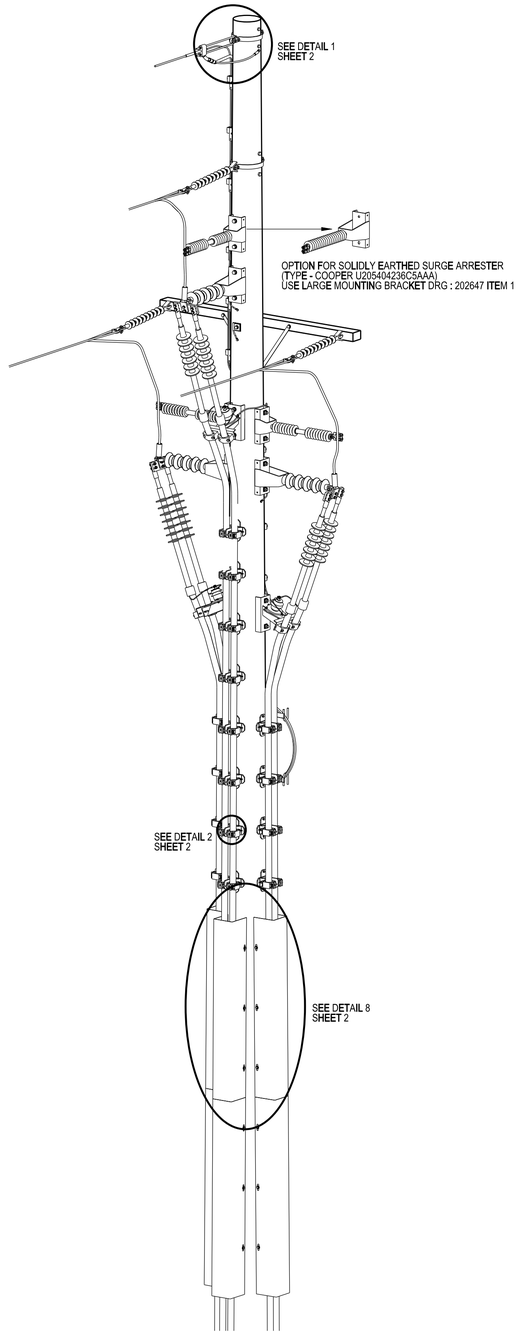

FRONT ISOMETRIC VIEW

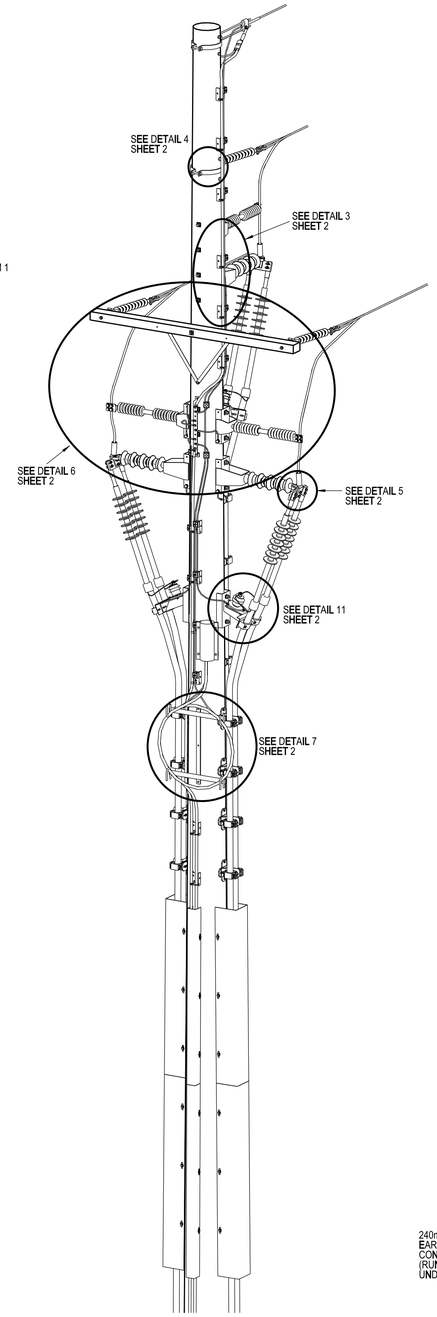

REAR ISOMETRIC VIEW

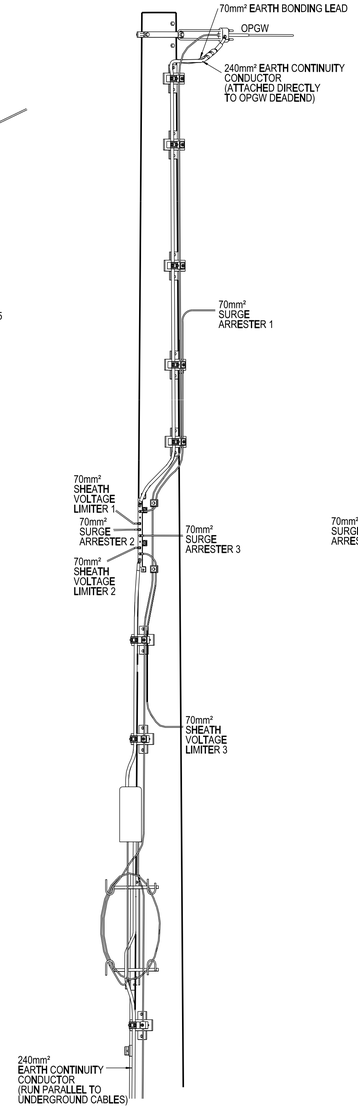

EARTHING SCHEMATIC - OPTION 1
SINGLE POINT BONDED SYSTEM
NOT TO SCALE

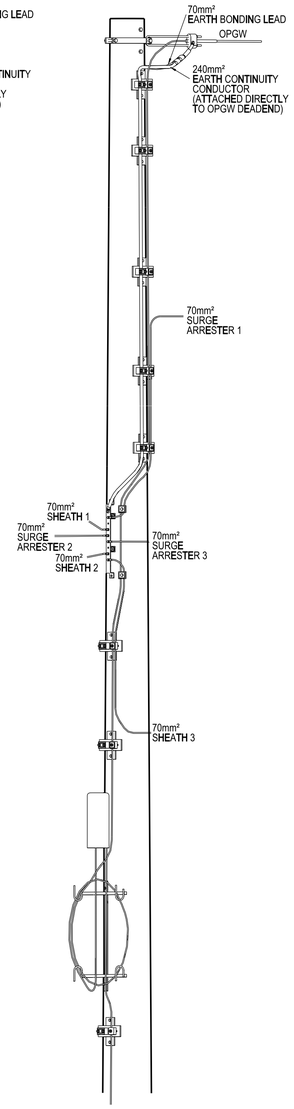

EARTHING SCHEMATIC - OPTION 2
CROSS BONDED SYSTEM
NOT TO SCALE

CONSTRUCTION ISSUE

CAD DRAWING DO NOT MANUALLY AMEND
AMENDMENTS

ASSOCIATED DRAWINGS

EnergyAustralia™
145 Newcastle Road
WALLSEND NSW 2287
PHONE: 45919388
FAX: 49519389

DESIGNED	ADAM BRADFORD
DRAWN	PATRICIA RIOS
CHECKED	ADAM BRADFORD
AUTHORISED	LEIGH DUNKLEY
DATE	19/07/11
SCALE	NTS
MAP REF.	-
LGA	-
PROJECT No.	STD
PROJTRAK No.	-

STANDARD CONSTRUCTION
66kV UGOH FOR CONCRETE POLE
300mm² TO 800mm² - TWIN CABLES PER PHASE
GENERAL ARRANGEMENT

SIZE	DRAWING No	SHEETS	AMD
A1	221569	01 of 02	0

20100209